0+007.303 PROFIL-NR 1

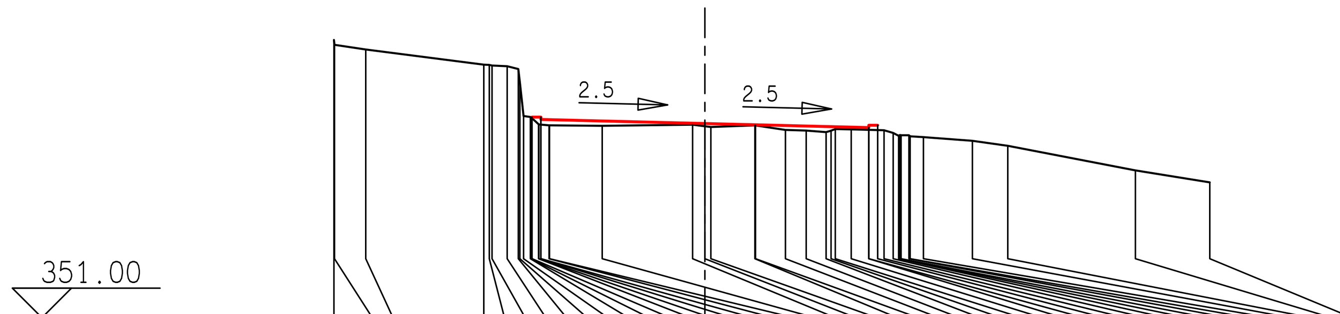

Urgelände	OK Straße	ENTFERNUNG
355.709		-6.279
355.627		-6.270
355.548		-5.740
355.290		-3.742
355.286		-3.649
355.276		-3.603
355.264		-3.346
355.216		-3.158
354.993		-3.132
354.419		-3.069
354.403		-2.954
354.402		-2.948
	354.401	-2.925
354.281		-2.815
354.276		-2.809
	354.401	-2.776
	354.361	-2.775
354.262		-2.637
354.262		-2.630
354.253		-1.738
354.272		-0.207
354.246	354.292	0.000
354.233		0.102
354.261		0.847
354.260		0.857
354.183		1.364
354.173		1.716
354.146		2.052
354.171		2.136
354.198		2.208
354.193		2.478
	354.223	2.775
	354.263	2.775
	354.263	2.925
354.178		3.033
354.132		3.188
354.084		3.280
354.098		3.302
354.093		3.321
354.093		3.454
354.075		3.474
354.062		3.700
353.999		4.529
353.914		5.128
353.498		7.288
353.294		8.547

0+020 PROFIL-NR 2

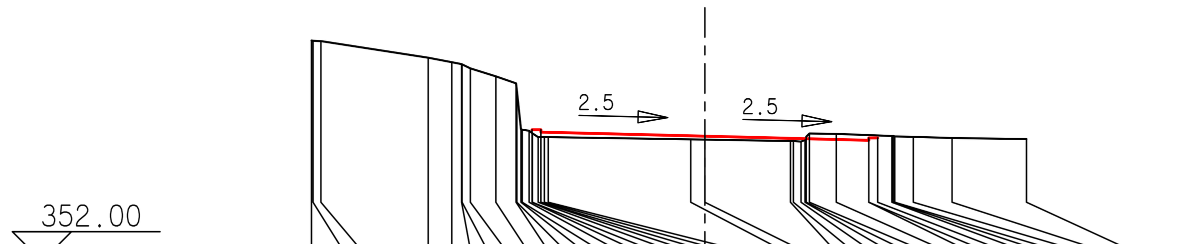

Urgelände	OK Straße	ENTFERNUNG
355.743		-6.659
355.739		-6.633
355.733		-6.499
355.452		-4.683
355.376		-4.284
355.343		-4.118
355.339		-4.109
355.271		-3.970
355.135		-3.538
355.017		-3.196
354.896		-3.182
354.235		-3.113
354.230		-3.091
354.213		-2.975
	354.229	-2.925
354.169		-2.920
354.103		-2.822
	354.229	-2.776
	354.189	-2.775
354.106		-2.717
354.105		-2.651
354.066		-0.239
354.062	354.120	0.000
354.038		1.449
354.039		1.499
354.028		1.628
354.057		1.695
354.111		1.716
354.166		1.770
354.160		2.225
	354.051	2.775
	354.091	2.775
	354.091	2.925
354.124		3.165
354.126		3.189
354.116		3.214
354.109		3.528
354.090		4.185
354.071		5.444

0+028 PROFIL-NR 3

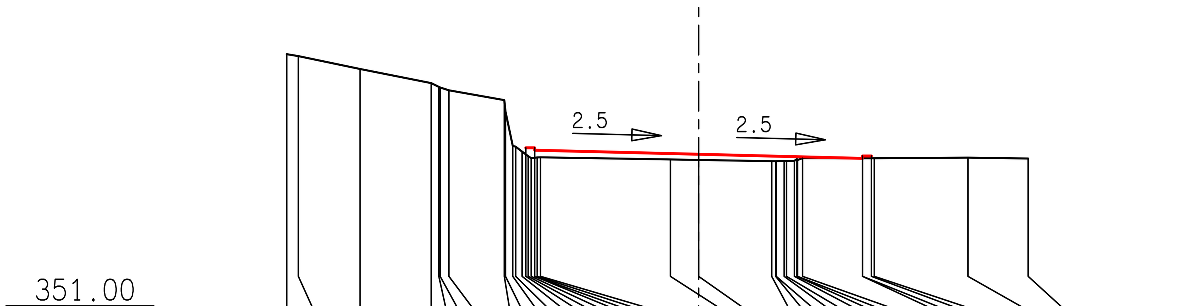

Urgelände	OK Straße	ENTFERNUNG
355.761		-6.972
355.729		-6.775
355.511		-5.731
355.271		-4.526
355.208		-4.397
355.197		-4.375
355.150		-4.227
354.984		-3.289
354.791		-3.269
354.210		-3.146
354.195		-3.097
354.112		-2.988
	354.176	-2.925
354.035		-2.885
354.000		-2.834
	354.176	-2.776
	354.136	-2.775
354.013		-2.733
354.015		-2.677
353.979		-0.477
353.971	354.067	0.000
353.950		1.237
353.949		1.304
353.950		1.313
353.953		1.448
353.953		1.487
353.955		1.621
353.987		1.664
353.970		1.675
354.000		1.759
	353.997	2.775
	354.037	2.775
	354.037	2.925
353.999		2.974
354.010		4.559
353.995		5.578

0+040 PROFIL-NR 4

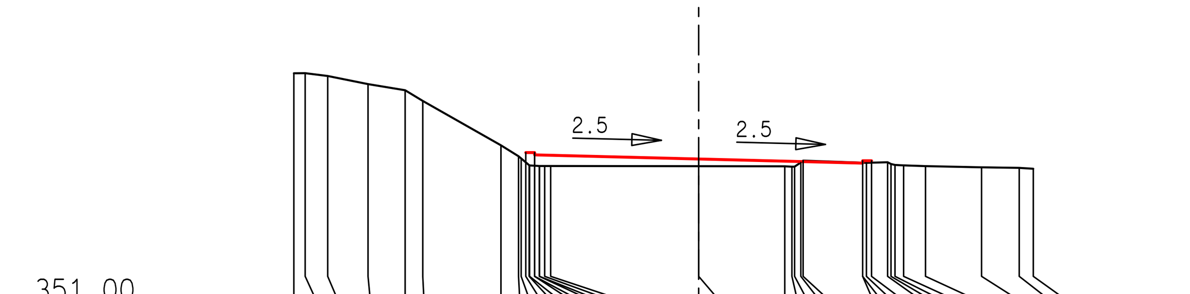

Urgelände	OK Straße	ENTFERNUNG
355.438		-6.850
355.440		-6.658
355.392		-6.277
355.255		-5.594
355.151		-4.967
354.970		-4.668
354.218		-3.345
354.033		-3.048
353.996		-3.004
	354.096	-2.925
353.882		-2.868
353.878		-2.861
	354.096	-2.776
	354.056	-2.775
353.868		-2.696
353.868		-2.693
353.868		-2.606
353.868		-2.504
353.865	353.987	0.000
353.863		1.457
353.856		1.578
353.857		1.623
353.928		1.729
353.959		1.767
	353.917	2.775
	353.957	2.775
353.922		2.838
	353.957	2.925
353.932		3.197
353.902		3.254
353.886		3.322
353.879		3.468
353.866		3.839
353.846		4.787
353.836		5.424
353.821		5.662

0+050 PROFIL-NR 5

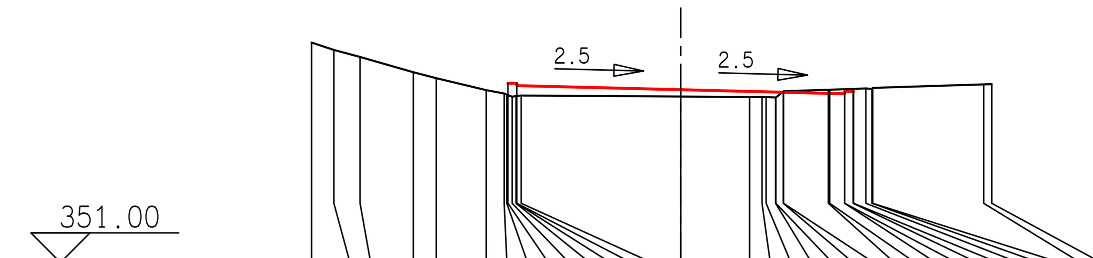

Urgelände	OK Straße	ENTFERNUNG
354.717		-6.250
354.592		-5.872
354.473		-5.428
354.215		-4.527
354.115		-4.138
353.912		-3.293
353.855		-2.989
353.835		-2.945
	354.029	-2.925
353.801		-2.854
353.813		-2.788
	354.029	-2.776
	353.989	-2.775
353.821		-2.701
353.804	353.920	0.000
353.797		1.165
353.799		1.376
353.796		1.445
353.788		1.605
353.788		1.611
353.889		1.735
353.893		1.740
353.920		2.499
353.920		2.522
	353.851	2.775
	353.891	2.775
353.932		2.919
	353.891	2.925
353.942		3.133
353.930		3.236
353.950		3.250
354.010		5.128
354.013		5.265

0+060 PROFIL-NR 6

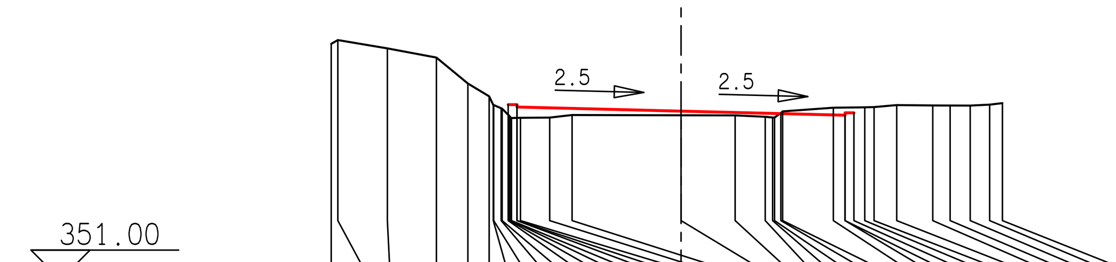

Urgelände	OK Straße	ENTFERNUNG
354.991		-5.919
355.056		-5.807
354.915		-4.969
354.760		-4.139
354.321		-3.607
354.104		-3.247
353.958		-3.177
353.956		-3.170
353.901		-3.044
353.894		-3.027
	353.963	-2.925
353.769		-2.903
353.735		-2.878
353.736		-2.869
	353.963	-2.776
	353.923	-2.775
353.740		-2.717
353.744		-2.223
353.787		-1.844
353.783	353.853	0.000
353.781		0.915
353.758		1.424
353.745		1.549
353.745		1.582
353.821		1.689
353.848		1.718
353.911		2.577
	353.784	2.775
	353.824	2.775
	353.824	2.925
353.917		3.108
353.922		3.266
353.955		3.649
353.949		4.259
353.948		4.553
353.947		4.892
353.963		5.222
353.988		5.437

0+070 PROFIL-NR 7

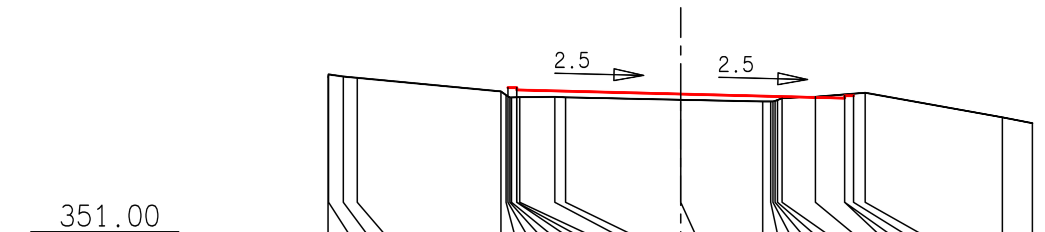

Urgelände	OK Straße	ENTFERNUNG
354.122		-5.970
354.170		-5.962
354.134		-5.712
354.112		-5.476
353.881		-3.044
353.818		-2.957
	353.946	-2.925
353.778		-2.893
353.779		-2.865
	353.946	-2.776
	353.906	-2.775
353.784		-2.725
353.790		-2.132
353.780		-1.950
353.739	353.837	0.000
353.710		1.387
353.710		1.523
353.710		1.561
353.720		1.597
353.735		1.638
353.767		1.715
353.790		2.279
	353.767	2.775
	353.807	2.775
	353.807	2.925
353.859		3.122
353.442		5.444
353.342		5.952

0+075.500 PROFIL-NR 8

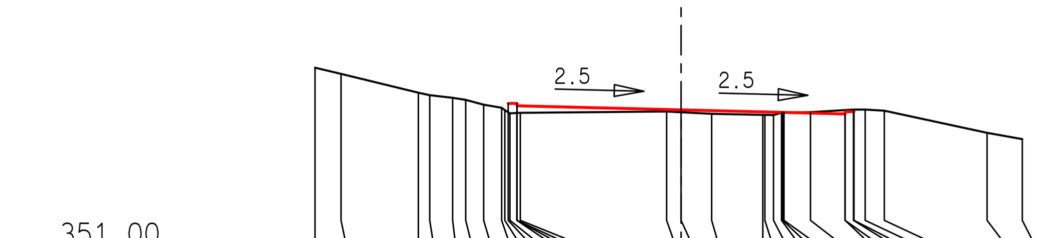

Urgelände	OK Straße	ENTFERNUNG
354.585		-6.194
354.480		-5.753
354.161		-4.445
354.119		-4.253
354.074		-3.865
354.040		-3.644
353.958		-3.340
353.906		-3.037
353.866		-2.983
	353.979	-2.925
353.811		-2.896
353.818		-2.779
	353.979	-2.776
	353.939	-2.775
353.820		-2.720
353.843		-0.245
353.830	353.870	0.000
353.803		0.517
353.785		1.383
353.785		1.418
353.782		1.564
353.821		1.699
353.828		1.719
353.827		1.741
353.831		2.189
	353.801	2.775
	353.841	2.775
353.875		2.917
	353.841	2.925
353.875		3.114
353.856		3.438
353.482		5.177
353.375		5.773

0+091 PROFIL-NR 9

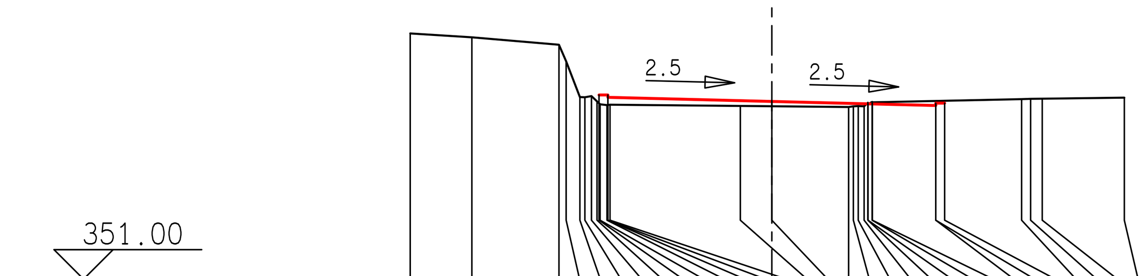

Urgelände	OK Straße	ENTFERNUNG
355.167		-6.121
355.102		-5.078
354.976		-3.604
354.694		-3.482
354.088		-3.249
354.085		-3.165
354.105		-3.053
354.015		-2.959
	354.124	-2.925
353.965		-2.907
353.953		-2.791
	354.124	-2.776
	354.084	-2.775
353.959		-2.739
353.938		-0.533
353.933	354.014	0.000
353.920		1.300
353.931		1.380
353.936		1.463
353.931		1.562
353.993		1.626
353.969		1.628
354.006		1.699
353.999		1.701
	353.945	2.775
	353.985	2.775
	353.985	2.925
354.053		4.228
354.058		4.380
354.060		4.577
354.079		5.967

0+100 PROFIL-NR 10

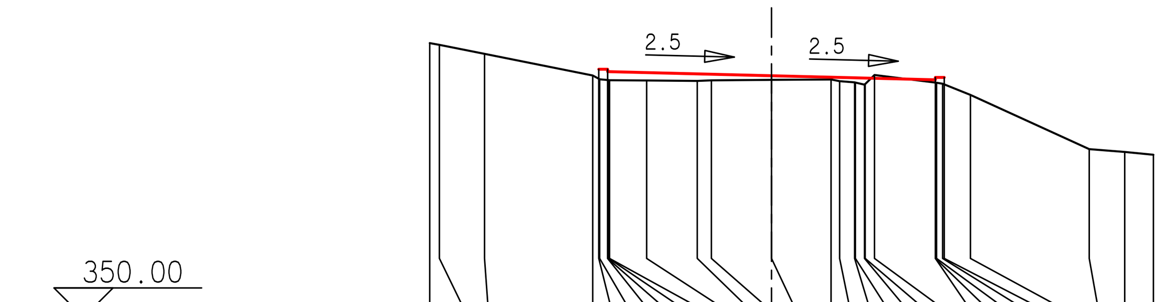

Urgelände	OK Straße	ENTFERNUNG
354.652		-5.788
354.622		-5.624
354.469		-4.860
354.102		-3.028
354.047	354.208	-2.925
354.038		-2.911
	354.208	-2.776
	354.168	-2.775
354.024		-2.756
354.022		-2.743
354.018		-2.115
354.010		-1.257
354.020		-1.018
354.028	354.098	0.000
354.035		1.008
354.006		1.153
353.986		1.407
353.983		1.420
353.947		1.575
353.957		1.586
354.111		1.744
	354.029	2.775
	354.069	2.775
353.979		2.795
353.963		2.898
	354.069	2.925
353.773		3.369
352.853		5.381
352.806		5.982
352.758		6.467

0+115 PROFIL-NR 11

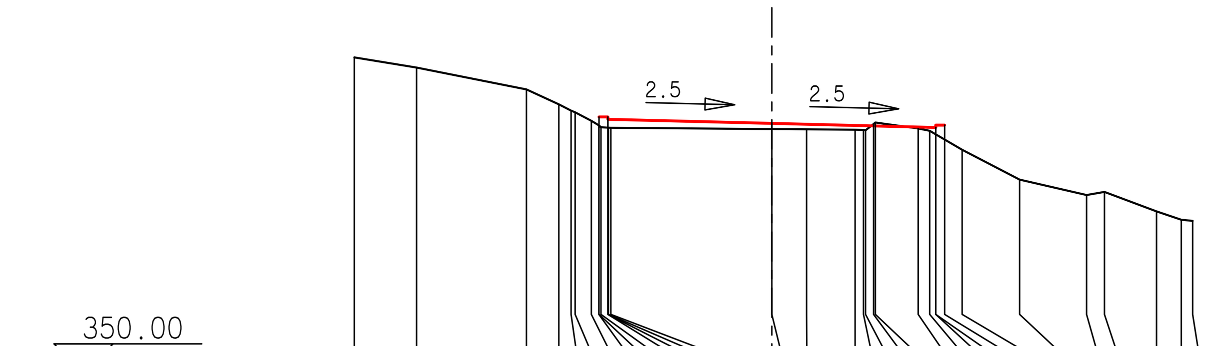

Urgelände	OK Straße	ENTFERNUNG
355.357		-7.068
355.185		-6.013
354.814		-4.154
354.561		-3.606
354.454		-3.398
354.426		-3.330
354.282		-3.056
354.206		-2.928
	354.347	-2.925
354.173		-2.893
	354.347	-2.776
	354.307	-2.775
354.165		-2.766
354.163		-2.725
354.142	354.238	0.000
354.138		0.588
354.130		1.410
354.127		1.551
354.121		1.586
354.227		1.722
354.253		1.752
354.152		2.478
354.112		2.672
	354.169	2.775
	354.209	2.775
	354.209	2.925
353.791		3.221
353.285		4.194
353.024		5.328
353.077		5.630
352.746		6.512
352.604		6.931
352.585		7.124

0+127.789 PROFIL-NR 12

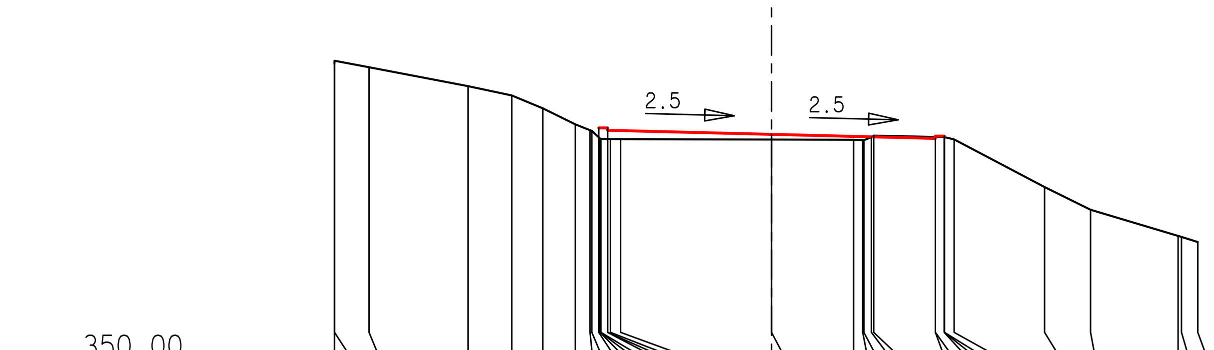

Urgelände	OK Straße	ENTFERNUNG
355.554		-7.401
355.505		-7.400
355.495		-6.816
355.174		-5.138
355.017		-4.398
354.798		-3.874
354.527		-3.322
354.427		-3.073
354.416		-3.043
	354.466	-2.925
354.286		-2.903
354.282		-2.896
354.282		-2.889
	354.466	-2.776
	354.426	-2.775
354.276		-2.727
354.275		-2.556
354.269	354.357	0.000
354.265		1.389
354.258		1.544
354.258		1.564
354.308		1.691
354.336		1.730
	354.288	2.775
	354.328	2.775
354.310		2.924
	354.328	2.925
354.310		2.929
354.271		3.092
353.464		4.624
353.079		5.403
352.635		6.885
352.618		6.943
352.532		7.219

Index	Datum	Gezeichnet	Änderung
1	08.05.2026	Pieper	Erstellung

Auftraggeber:

Stadt Neuenrade
Alte Burg 1
58809 Neuenrade

Maßnahme:

Straßenausbau
"Ginsterweg"
58809 Neuenrade

Gemarkung Neuenrade * Flur 012 * Flurstücke 373, 725

FINGER BAUPLAN
PLANUNGSBÜRO FÜR BAUWESEN

Finger Bauplan GmbH
Silmecke 47
59846 Sundern

Fon 02933 - 780023
Fax 02933 - 780024

info@finger-bauplan.de
www.finger-bauplan.de

ENTWURFSPLANUNG

Straßenbau

Querprofile 1

Sachbearb.	Pieper
Projektleiter	Schielasko
Projekt Nr.:	S-1420-2025
Blatt:	E-S-4
Maßstab:	1 : 100

59846 Sundern, 08.05.2026

Entwurfsverfasser